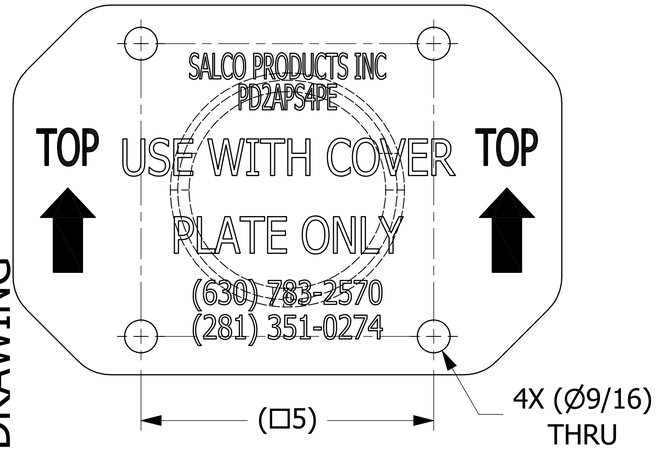

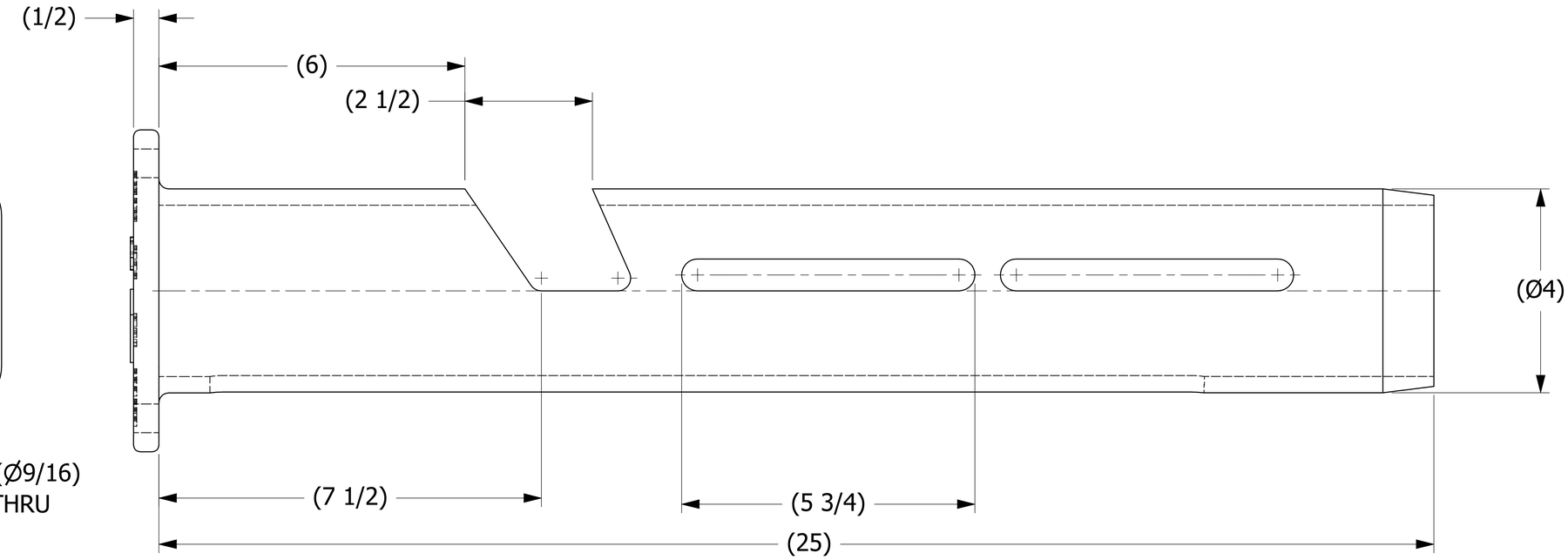

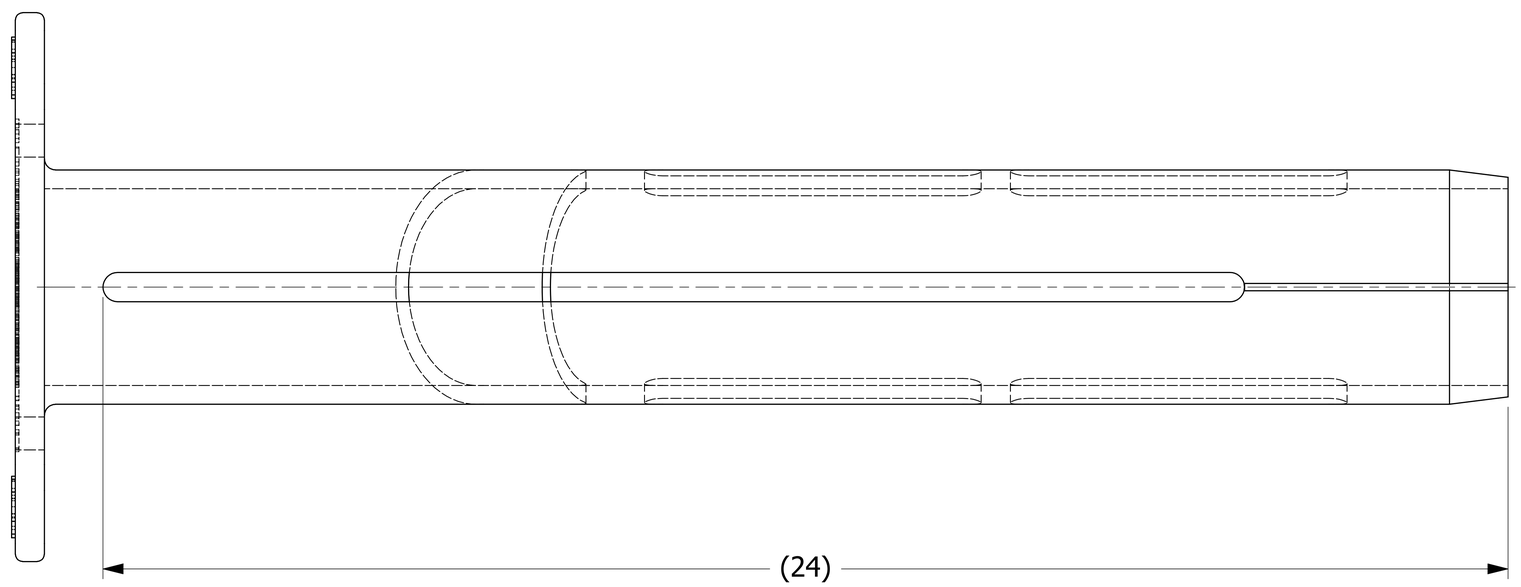

SALES DRAWING SALES DRAWING

SALES DRAWING SALES DRAWING

REV	BY	DATE	DESCRIPTION
C	RJP	11-23-16	UPDATED TO CURRENT STANDARDS, ADDED BOM
B	VD	2-1-11	CHANGED +/- 1/4" TOLERANCE TO +/- 3/8"
A	REH	8-5-10	CHANGE WALL THICKNESS, ADDED TOL. & NOTE

UNLESS OTHERWISE SPECIFIED
DIMENSIONAL TOLERANCES
FRACTIONAL: ±1/16
X.XX: ±.03
X.XXX: ±.015
ANGULAR: ±1°
DEBURR ALL SHARP EDGES.
ALL MACHINED SURFACES TO HAVE A 125 RMS FINISH UNLESS NOTED OTHERWISE.
THIRD ANGLE PROJECTION

DRAWN BY:	KRSJ
CHECKED BY:	ACC
PROTOTYPE BY:	KRSJ
PROTOTYPE DATE:	11/24/1998
APPROVED FOR PRODUCTION BY:	KRSJ
PRODUCTION DATE:	2/2/1999

SALCO PRODUCTS, INC.

PART NAME: PD II - AERATOR PIPE SLEEVE

MATERIAL: FDA, NATURAL, HIGH DENSITY POLYTHYLENE

PROJECT #: 981019 | SHEET #: 1 OF 1 | SCALE: 1:1

DRAWING #: E9792 | PART #: PD2APS4PE

THIS PRINT, PROPERTY OF SALCO PRODUCTS INC, CONTAINS PROPRIETARY INFORMATION AND MUST NOT BE COPIED, REPRODUCED, OR USED DETRIMENTALLY TO OUR INTEREST.